Autonics

ROTARY ENCODER(ABSOLUTE TYPE)
ENP SERIES
INSTRUCTION MANUAL

Thank you for choosing our Autonics product.
Please read the following safety considerations before use.

■ Safety Considerations

※Please observe all safety considerations for safe and proper product operation to avoid hazards.
※⚠ symbol represents caution due to special circumstances in which hazards may occur.

⚠ **Warning** Failure to follow these instructions may result in serious injury or death.
⚠ **Caution** Failure to follow these instructions may result in personal injury or product damage.

⚠ Warning

1. **Fail-safe device must be installed when using the unit with machinery that may cause serious injury or substantial economic loss. (e.g. nuclear power control, medical equipment, ships, vehicles, railways, aircraft, combustion apparatus, safety equipment, crime/disaster prevention devices, etc.)**
   Failure to follow this instruction may result in fire, personal injury, or economic loss.
2. **Install on a device panel to use.**
   Failure to follow this instruction may result in fire.
3. **Do not connect, repair, or inspect the unit while connected to a power source.**
   Failure to follow this instruction may result in fire.
4. **Check 'Connections' before wiring.**
   Failure to follow this instruction may result in fire.
5. **Do not disassemble or modify the unit.**
   Failure to follow this instruction may result in fire.

⚠ Caution

1. **Use the unit within the rated specifications.**
   Failure to follow this instruction may result in fire or product damage.
2. **Do not short the load.**
   Failure to follow this instruction may result in product damage by fire.
3. **Do not use the unit in the place where flammable/explosive/corrosive gas, humidity, direct sunlight, radiant heat, vibration, impact, or salinity may be present.**
   Failure to follow this instruction may result in fire or explosion.
4. **Do not use the unit near the place where there is the equipment which generates strong magnetic force or high frequency noise and strong alkaline, strong acidic exists.**
   Failure to follow this instruction may result in product damage.

■ Ordering Information

ENP	-	1	1	1	R	-	360	-	P
Series		Output code	Output method	Power supply	Rotating direction		Resolutions/ revolution		Control output
Diameter Ø60mm (Shaft diameter : Ø10mm)		1 : BCD code	0 : Negative logic 1 : Positive logic	0: 5VDC ±5% 1: 12-24VDC ±5%	F: Output value increase at CW direction R: Output value increase at CCW direction		006: 6 division 008: 8 division 012: 12 division 016: 16 division 024: 24 division 360: 360 division		N: NPN open collector output P: PNP open collector output

■ Specifications

Type			Diameter Ø60mm shaft type Absolute Rotary encoder					
Model		PNP open collector output	ENP-111□-006-P	ENP-111□-008-P	ENP-111□-012-P	ENP-111□-016-P	ENP-111□-024-P	ENP-11□□-360-P
		NPN open collector output	ENP-101□-006-N	ENP-101□-008-N	ENP-101□-012-N	ENP-101□-016-N	ENP-101□-024-N	ENP-10□□-360-N
Resolution			6 division	8 division	12 division	16 division	24 division	360 division
Electrical specification	Output phase		TP(Timing Pulse): 2 bit TS(Signal Pulse): 4 bit (BCD,EP)	TP(Timing Pulse): 2 bit TS(Signal Pulse): 5 bit (BCD,EP)	TP(Timing Pulse): 2 bit TS(Signal Pulse): 6 bit (BCD,EP)	TP(Timing Pulse): 2 bit TS(Signal Pulse): 6 bit (BCD,EP)	TP(Timing Pulse): 2 bit TS(Signal Pulse): 7 bit (BCD,EP)	TS(Signal Pulse): 10 bit
	Output angle		TP1: 53°±30' TP2: 15°±30' P: 60°±30' TS: 56°±30'	TP1: 39°±30' TP2: 15°±30' P: 45°±30' TS: 42°±30'	TP1: 3°±30' TP2: 15°±30' P: 30°±30' TS: 26°±30'	TP1: 2°±30' TP2: 11.25°±30' P: 22.5°±30' TS: 19.5°±30'	TP1: 8°±30' TP2: 3°±30' P: 15°±30' TS: 11°±30'	TS: 1°±30'
	Control output	PNP open collector output	Output voltage: Min.(Power voltage-1.5)VDC⎓, Load current: Max. 32mA					
		NPN open collector output	Load current: Max. 32mA, Residual voltage: Max. 1VDC⎓					
	Response time	PNP open collector output	TON=800ns, TOFF=Max. 800ns(Cable length: 1m, I sink = 32mA)					
		NPN open collector output	TON=800ns, TOFF=Max. 800ns(Cable length: 1m, I sink = 32mA)					
	Max. Response frequency		20kHz					
	Power supply		5VDC⎓ ±5%(Ripple P-P: Max. 5%), 12-24VDC⎓ ±5%(Ripple P-P: Max. 5%)					
	Current consumption		Max. 100mA(Disconnection of the load)					
	Insulation resistance		Max. 100MΩ(at 500VDC megger between all terminals and case)					
	Dielectric strength		750VAC 50/60Hz for 1 minute(between all terminals and case)					
	Connection		Axial cable type					
Mechanical spec.	Starting torque		Max. 500gf·cm(0.05N·m)					
	Moment of inertia		Max. 300g·cm²(3×10⁻⁵kg·m²)					
	Shaft loading		Radial: 10kgf, Thrust: 2.5kgf					
	Mechanical revolution※1		3,600rpm					
Vibration			1.5mm amplitude at frequency of 10 to 55Hz in each of X, Y, Z direction for 2 hours					
Shock			Max. 75G					
Environment	Ambient temp.		-10 to 70℃, storage: -25 to 85℃					
	Ambient humi.		35 to 85%RH, storage: 35 to 90%RH					
Protection			IP50(IEC standard)					
Cable			Ø8mm, 12P, Length: 1m, Double shield cable (AWG 24, Core wire diameter: 0.08mm, No. of core wire: 40, Insulator out diameter: Ø1mm)					
Accessory			Mounting bracket, Coupling					
Weight※2			Approx. 478g(Approx. 400g)					

※1: Make sure that max. response revolution should be lower than or equal to max. allowable revolution when selecting the resoultion.

$$[\text{Max. response revolution(rpm)} = \frac{\text{Max. response frequency}}{\text{Resolution}} \times 60 \text{ sec.}]$$

※2: The weight includes packaging. The weight in parentehsis is for unit only.
※Environment resistance is rated at no freezing or condensation.

■ Dimensions

(unit: mm)

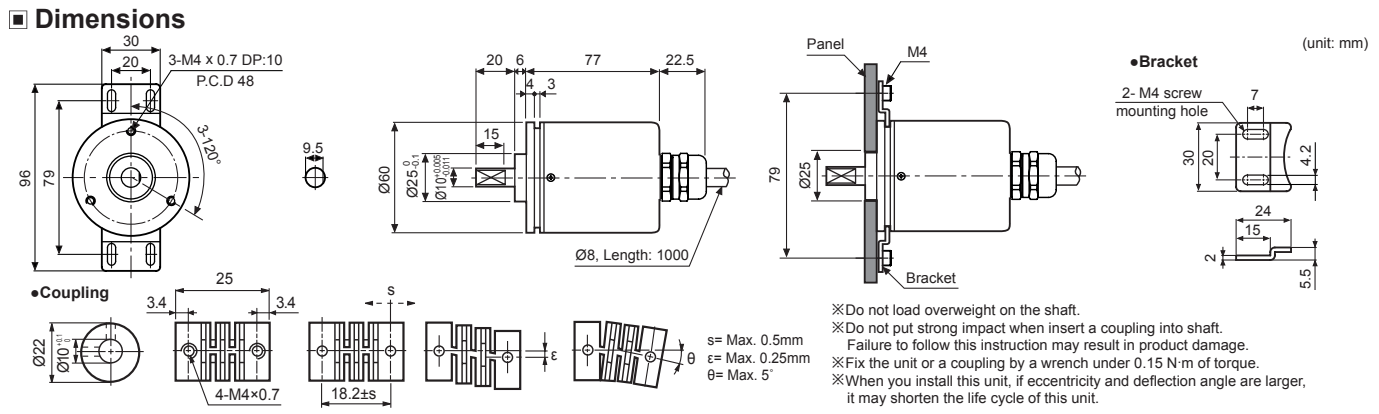

※Do not load overweight on the shaft.
※Do not put strong impact when insert a coupling into shaft.
Failure to follow this instruction may result in product damage.
※Fix the unit or a coupling by a wrench under 0.15 N·m of torque.
※When you install this unit, if eccentricity and deflection angle are larger, it may shorten the life cycle of this unit.

■ Connections

Wire color \ Resolution		6 division	8 division	12 division	16 division	24 division	360 division
Power wire	White※1	+V					
	Black※1	GND(0V)					
	Shield wire	F.G.					
Output wire	Black	TP1※2					2^0
	Brown	2^0	2^0	2^0	2^0	2^0	2^1
	Red	2^1	2^1	2^1	2^1	2^1	2^2
	Orange	2^2	2^2	2^2	2^2	2^2	2^3
	Yellow	N·C	2^3	2^3	2^3	2^3	2^0×10
	Green	N·C	N·C	2^0×10	2^0×10	2^0×10	2^1×10
	Blue	N·C	N·C	N·C	N·C	2^1×10	2^2×10
	Purple	N·C					2^3×10
	Gray	TP2※2					2^0×100
	White	EP(Parity)※3					2^1×100
	Shield wire	F.G.					

※1: Insulator external diameter is Ø1.5mm.
※2: TP1/TP2
Because low resolution model has long output signal period, this signal for enable is easy to determine signal recognization point about output.
※3: EP
Parity signal. It outputs odd parity.
※Unused wire must be insulated.
※Encoder case and shield wire must be grounded.
※N·C: Not Connected.
※Output cable must not be short-circuited, because Driver IC is used in output circuit.
※Do not apply tensile strength over 30N to the cable.

■ Output Waveform (6 division)

Model		ENP-111□-006-P						
Shaft revolution angle(°)		0	60	120	180	240	300	360
Output value		6	1	2	3	4	5	6
Wire color	Wire function							
Black	TP1							
Gray	TP2							
Brown	BCD(2^0)							
Red	BCD(2^1)							
Orange	BCD(2^2)							
White	EP(Parity)							

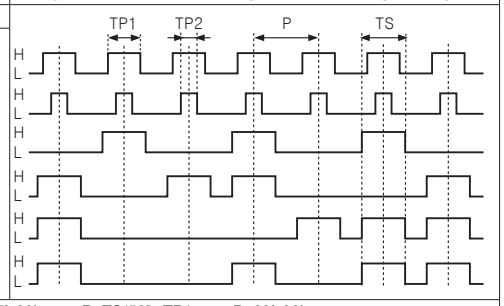

● TP1=53°±30', TP2=15°±30' ● P>TS(56°)>TP1 ● P=60°±30'
Above waveform is based on the positive logic.
(The ouput waveform of negative logic is opposite to above waveform.)

■ Output Waveform (16 division)

Model		ENP-111□-016-P																
Shaft revolution angle(°)		0	22.5	45	67.5	90	112.5	135	157.5	180	202.5	225	247.5	270	292.5	315	337.5	360
Output value		16	1	2	3	4	5	6	7	8	9	10	11	12	13	14	15	16
Wire color	Wire function																	
Black	TP1																	
Gray	TP2																	
Brown	BCD(2^0)																	
Red	BCD(2^1)																	
Orange	BCD(2^2)																	
Yellow	BCD(2^3)																	
Green	BCD(2^0×10)																	
White	EP(Parity)																	

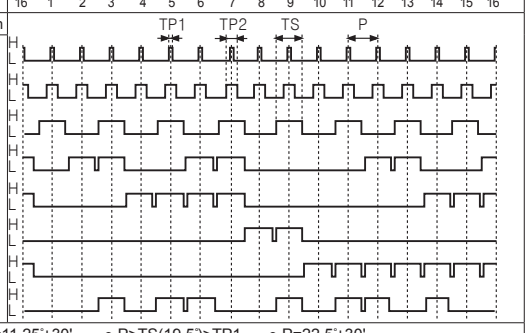

● TP1=2°±30', TP2=11.25°±30' ● P>TS(19.5°)>TP1 ● P=22.5°±30'
Above waveform is based on the positive logic.
(The ouput waveform of negative logic is opposite to above waveform.)

■ Control Output Diagram

Output	PNP open colloector output		NPN open collector output	
Model	ENP-11□□-□-P		ENP-10□□-□-N	
Item	Encoder circuit	Load connection	Encoder circuit	Load connection
Output circuit				

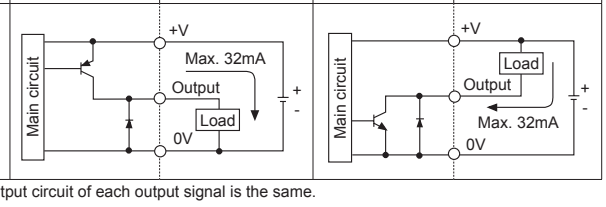

※The output circuit of each output signal is the same.

■ Output Waveform (8 division)

Model		ENP-111□-008-P								
Shaft revolution angle(°)		0	45	90	135	180	225	270	315	360
Output value		8	1	2	3	4	5	6	7	8
Wire color	Wire function									
Black	TP1									
Gray	TP2									
Brown	BCD(2^0)									
Red	BCD(2^1)									
Orange	BCD(2^2)									
Yellow	BCD(2^3)									
White	EP(Parity)									

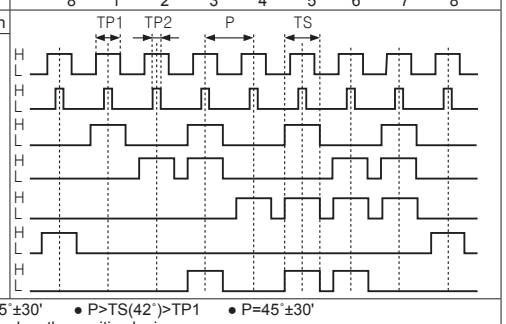

● TP1=39°±30', TP2=15°±30' ● P>TS(42°)>TP1 ● P=45°±30'
Above waveform is based on the positive logic.
(The ouput waveform of negative logic is opposite to above waveform.)

■ Output Waveform (24 division)

Model		ENP-111□-024-P																																			
Shaft revolution angle(°)		0	15	30	45	60	75	90	105	120	135	150	165	180	195	210	225	240	255	270	285	300	315	330	345	360											
Output value		24	1	2	3	4	5	6	7	8	9	10	11	12	13	14	15	16	17	18	19	20	21	22	23	24											
Wire color	Wire function																																				
Black	TP1																																				
Gray	TP2																																				
Brown	BCD(2^0)																																				
Red	BCD(2^1)																																				
Orange	BCD(2^2)																																				
Yellow	BCD(2^3)																																				
Green	BCD(2^0×10)																																				
Blue	BCD(2^1×10)																																				
White	EP(Parity)																																				

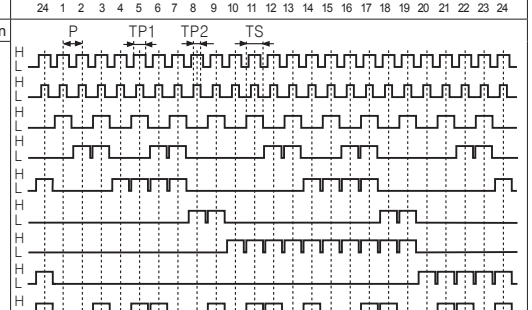

● TP1=8°±30', TP2=3°±30' ● P>TS(11°)>TP1 ● P=15°±30'
Above waveform is based on the positive logic.
(The ouput waveform of negative logic is opposite to above waveform.)

■ Output Waveform (12 division)

Model		ENP-111□-012-P											
Shaft revolution angle(°)		0	30	60	90	120	150	180	210	240	270	300	330	360
Output value		12	1	2	3	4	5	6	7	8	9	10	11	12
Wire color	Wire function													
Black	TP1													
Gray	TP2													
Brown	BCD(2^0)													
Red	BCD(2^1)													
Orange	BCD(2^2)													
Yellow	BCD(2^3)													
Green	BCD(2^0×10)													
White	EP(Parity)													

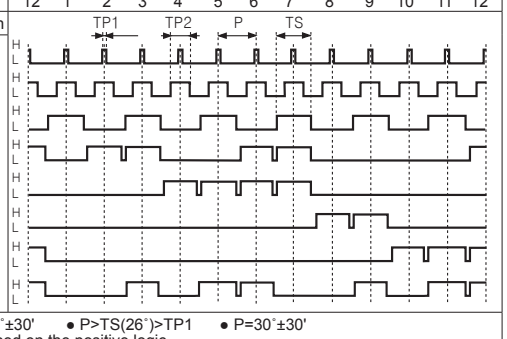

● TP1=3°±30', TP2=15°±30' ● P>TS(26°)>TP1 ● P=30°±30'
Above waveform is based on the positive logic.
(The ouput waveform of negative logic is opposite to above waveform.)

■ Output Waveform (360 division)

Model		ENP-11□□-360-P																																			
Shaft revolution angle(°)		0	1	2	3	4	5	·	·	·	·	·	198	199	200	201	202	·	·	·	·	·	356	357	358	359	360											
Output value		0	1	2	3	4	5	·	·	·	·	·	198	199	200	201	202	·	·	·	·	·	356	357	358	359	0											
Wire color	Wire function																																				
Black	BCD(2^0)																																				
Brown	BCD(2^1)																																				
Red	BCD(2^2)																																				
Orange	BCD(2^3)																																				
Yellow	BCD(2^0×10)																																				
Green	BCD(2^1×10)																																				
Blue	BCD(2^2×10)																																				
Violet	BCD(2^3×10)																																				
Gray	BCD(2^0×100)																																				
White	BCD(2^1×100)																																				

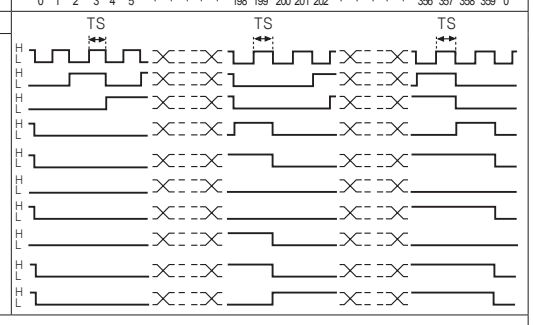

● TS=1°±30'
Above waveform is based on the positive logic.
(The ouput waveform of negative logic is opposite to above waveform.)

■ Cautions during Use

1. Follow instructions in 'Cautions during Use'. Otherwise, It may cause unexpected accidents.
2. 5VDC, 12-24VDC power supply should be insulated and limited voltage/current or Class 2, SELV power supply device.
3. For using the unit with the equipment which generates noise (switching regulator, inverter, servo motor, etc.), ground the shield wire to the F.G. terminal.
4. Ground the shield wire to the F.G. terminal.
5. When using switching mode power supply, frame ground (F.G.) terminal of power supply should be grounded.
6. Wire as short as possible and keep away from high voltage lines or power lines, to prevent inductive noise.
7. Check the wire type and response frequency when extending wire because of distortion of waveform or residual voltage increment etc by line resistance or capacity between lines.
8. This unit may be used in the following environments.
   ①Indoors (in the environment condition rated in 'Specifications')
   ②Altitude max. 2,000m
   ③Pollution degree 2
   ④Installation category II

■ Main Products

- Photoelectric Sensors
- Fiber Optic Sensors
- Door Sensors
- Door Side Sensors
- Area Sensors
- Proximity Sensors
- Pressure Sensors
- Rotary Encoders
- Connector/Sockets
- Switching Mode Power Supplies
- Control Switches/Lamps/Buzzers
- I/O Terminal Blocks & Cables
- Stepper Motors/Drivers/Motion Controllers
- Graphic/Logic Panels
- Field Network Devices
- Laser Marking System (Fiber, CO_2, Nd: YAG)
- Laser Welding/Cutting System
- Temperature Controllers
- Temperature/Humidity Transducers
- SSRs/Power Controllers
- Counters
- Timers
- Panel Meters
- Tachometer/Pulse (Rate) Meters
- Display Units
- Sensor Controllers

Autonics Corporation
http://www.autonics.com
■ **HEADQUARTERS:**
18, Bansong-ro 513 beon-gil, Haeundae-gu, Busan, South Korea, 48002
TEL: 82-51-519-3232
■ **E-mail:** sales@autonics.com

※**The above specifications are subject to change and some models may be discontinued without notice.**
※**Be sure to follow cautions written in the instruction manual, and the technical descriptions (catalog, homepage).**