Photoelectric Sensors with Synchronous Detection

BY Series

INSTRUCTION MANUAL

TCD230051AA

Autonics

Thank you for choosing our Autonics product.
Read and understand the instruction manual and manual thoroughly before using the product.
For your safety, read and follow the below safety considerations before using.
For your safety, read and follow the considerations written in the instruction manual, other manuals and Autonics website.
Keep this instruction manual in a place where you can find easily.
The specifications, dimensions, etc. are subject to change without notice for product improvement. Some models may be discontinued without notice.
Follow Autonics website for the latest information.

Safety Considerations

- Observe all 'Safety Considerations' for safe and proper operation to avoid hazards.
- ⚠ symbol indicates caution due to special circumstances in which hazards may occur.

⚠ Warning Failure to follow instructions may result in serious injury or death.

01. Fail-safe device must be installed when using the unit with machinery that may cause serious injury or substantial economic loss. (e.g., nuclear power control, medical equipment, ships, vehicles, railways, aircraft, combustion apparatus, safety equipment, crime/disaster prevention devices, etc.)
Failure to follow this instruction may result in personal injury, economic loss or fire.
02. Do not use the unit in the place where flammable/explosive/corrosive gas, high humidity, direct sunlight, radiant heat, vibration, impact or salinity may be present.
Failure to follow this instruction may result in explosion or fire.
03. Do not disassemble or modify the unit.
Failure to follow this instruction may result in fire.
04. Do not connect, repair, or inspect the unit while connected to a power source.
Failure to follow this instruction may result in fire.
05. Check 'Connections' before wiring.
Failure to follow this instruction may result in fire.

⚠ Caution Failure to follow instructions may result in injury or product damage.

01. Use the unit within the rated specifications.
Failure to follow this instruction may result in fire or product damage.
02. Use a dry cloth to clean the unit, and do not use water or organic solvent.
Failure to follow this instruction may result in fire.

Cautions during Use

- Follow instructions in 'Cautions during Use'. Otherwise, It may cause unexpected accidents.
- When connecting an inductive load such as DC relay or solenoid valve to the output, remove surge by using diodes or varistors.
- Use the product after 0.5 sec of the power input.
  When using a separate power supply for the sensor and load, supply power to the sensor first.
- The power supply should be insulated and limited voltage/current or Class 2, SELV power supply device.
- Wire as short as possible and keep it away from high voltage lines or power lines to prevent surge and inductive noise.
- When using switching mode power supply (SMPS), ground F.G. terminal and connect a condenser between 0V and F.G. terminal to remove noise.
- When using a sensor with a noise-generating equipment (e.g., switching regulator, inverter, and servo motor), ground F.G. terminal of the equipment.
- This unit may be used in the following environments.
  - Indoors (in the environment condition rated in 'Specifications')
  - Altitude max. 2,000 m
  - Pollution degree 3
  - Installation category II

Product Components

- Emitter × 1, Receiver × 1
- Bracket × 2
- Instruction manual
- M3 bolt × 4, M3 nut × 4

Ordering Information

This is only for reference, the actual product does not support all combinations.
For selecting the specified model, follow the Autonics website.

BY ❶ ❷ - ❸ ❹ ❺ ❻ - ❼

❶ Sensing direction
No mark: Front
S: Side
❷ Sensing distance
500: 500 mm
❸ Sensing type
T: Through-beam
❹ Power supply
D: 12 - 24 VDC
❺ Output
T: Solid state (transistor)
❻ Emitter/Receiver
1: Emitter
2: Receiver
❼ Connection
No mark: Cable type

Cautions during Installation

- Be sure to install this product by following the usage environment, location, and specified ratings. Consider the listed conditions below.
  - Installation environment and background (reflected light)
  - Sensing distance and sensing target
  - Direction of target's movement
  - Characteristic curves
- When installing multiple sensors closely, it may result in malfunction due to mutual interference.
- For installation, tighten the screw with a torque of 0.3 N m. Mount the brackets correctly to prevent the twisting of the sensor's optical axis.
- Do not impact with a hard object or bend the cable excessively. That could decrease the product's water resistance.
- Use this product after the test. Check whether the indicator works appropriately for the positions of the detectable object.

Through-beam

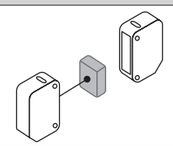

Emitter - Receiver:
Install to face each other

Operation Timing Chart and Indicators

	Dark ON
Received light	Received / Interrupted
Operation indicator (red)	ON / OFF
Transistor output	ON / OFF

Connections

- Be sure to use the same power for the emitter and receiver.
- Be sure to connect the synchronous wire (white) of the emitter and receiver.

■ Emitter

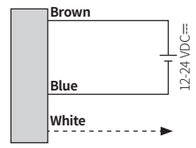

■ Receiver

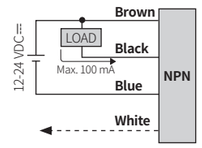

Circuit

■ NPN open collector output

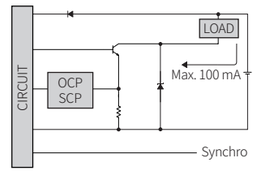

- OCP (over current protection), SCP (short circuit protection)
- If short-circuit the control output terminal or supply current over the rated specification, normal control signal is not output due to the protection circuit.

Dimensions

- Unit: mm, For the detailed drawings, follow the Autonics website.

A	Optical axis
B	Operation indicator (red)

■ Front detection type

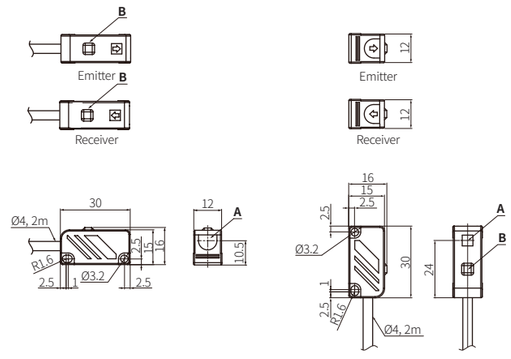

■ Side detection type

■ Bracket

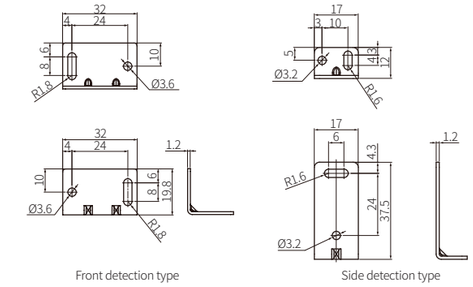

Front detection type
Side detection type

Specifications

Model	BY□500-TDT-□
Sensing type	Through-beam
Sensing distance	500 mm
Sensing target	Opaque materials
Min. sensing target	≥ Ø 5 mm
Response time	≤ 1 ms
Light source	Infrared
Peak emission wavelength	940 nm
Operation mode	Dark ON mode
Indicator	Operation indicator (red)
Certification	cULus LISTED, RoHS, EAC
Unit weight (packaged)	≈ 150 g (≈ 200 g)
Power supply	12-24 VDC⎓ ±10% (ripple P-P: ≤ 10%)
Current consumption	Emitter: ≤ 30 mA, receiver: ≤ 30 mA
Control output	NPN open collector output
Load voltage	≤ 26.4 VDC⎓
Load current	≤ 100 mA
Residual voltage	≤ 1 VDC⎓
Protection circuit	Reverse power protection circuit, output short overcurrent protection circuit
Insulation resistance	≥ 20 MΩ (500 VDC⎓ megger)
Noise immunity	±240 VDC⎓ the square wave noise (pulse width: 1 μs) by the noise simulator
Dielectric strength	Between the charging part and the case: 1,000 VAC~ 50/60 Hz for 1 min
Vibration	1.5 mm double amplitude at frequency of 10 to 55 Hz in each X, Y, Z direction for 2 hours
Shock	500 m/s² (≈ 50 G) in each X, Y, Z direction for 3 times
Ambient illuminance (receiver)	Sunlight: ≤ 11,000 lx, incandescent lamp: ≤ 3,000 lx
Ambient temperature	-10 to 60 °C, storage: -25 to 70 °C (no freezing or condensation)
Ambient humidity	35 to 85 %RH, storage: 35 to 85 %RH (no freezing or condensation)
Protection rating	IP50 (IEC standard)
Connection	Cable type
Cable specification	Ø 4 mm, 4-wire (Emitter: 3-wire), 2 m
Wire specification	AWG26 (0.52 mm, 20-core), insulator outer diameter: Ø 1 mm
Material	Case: PC, sensing part: PC, bracket: SPCC, bolt: SCM, nut: SCM

18, Bansong-ro 513Beon-gil, Haeundae-gu, Busan, Republic of Korea, 48002
www.autonics.com | +82-2-2048-1577 | sales@autonics.com
Autonics